PRE-FEASIBILITY REPORT FOR THE PROVISION OF CIVIL STORMWATER MANAGEMENT SERVICES FOR THE PROPOSED DEVELOPMENT OF PROPERTIES IN CATO RIDGE FOR THE CATO RIDGE DEVELOPMENT COMPANY

APRIL 2023

K&T PROJECT REFERENCE: 20207/ SWM O

REVISION 0

TEL: 033 347 5453/5046
FAX: 088 033 347 5453
WEB: www.kanteys.co.za
E-MAIL: ktdbn@pmb.kanteys.co.za
P O BOX 290, HILTON, 3245

KANTEY & TEMPLER (PTY) LTD
CONSULTING ENGINEERS
REG. NO. 1966/09839/07

Engineering African Development

Details of this report

Client Name	CATO RIDGE DEVELOMENT COMPANY
Document Title	PRE-FEASIBILITY REPORT FOR THE PROVISION OF CIVIL ENGINEERING SERVICES FOR THE PROPOSED DEVELOPMENT OF PROPERTIES IN CATO RIDGE FOR THE CATO RIDGE DEVELOPMENT COMPANY
K&T Project Reference	20207/SWM 0
File Name	20207-PMB/SWM/0
Prepared by	R. Keppler

Report Revision Record

Revision	Date	Description
0	04/04/2023	Issued for Review

This report has been prepared by Kantey & Templer (Pty) Ltd, with all reasonable skill, care and diligence within the terms of the Contract with the client, incorporating our General Terms and Conditions of Business and taking account of the resources devoted to it by agreement with the client.

We disclaim any responsibility to the client and others in respect of any matters outside the scope of the above.

This report is confidential to the client and we accept no responsibility of whatsoever nature to third parties to whom this report, or any part thereof, is made known. Any such party relies on the report at their own risk.

For and on behalf of

Kantey & Templer (Pty) Ltd

Approved by: Kevin Hohls

Signed:

Position: Professional Engineer

Date: 04 April 2023

Copyright

This report:
(a) Enjoys copyright protection and the copyright vests with Kantey & Templer, unless otherwise agreed to in writing.
(b) May not be reproduced or transmitted in any form or by any means whatsoever to any person without the written permission of the copyright holder

Contents

1. EXECUTIVE SUMMARY 1

2. INTRODUCTION 2

2.1 Location & Access……2

3. DEVELOPMENT PHASING……3

3.1 Priority Phase 1……..3

3.2 Priority Phase 2 …… ……3

3.3 Priority Phase 3

3.4 General…… ……...4

4. BULK INFRASTRUCTURE……..4

5. PROPOSED BUILDING DEVELOPMENT……5

6. NEW INFRASTRUCTURE……...5

7. STORMWATER MANAGEMENT SYSTEM……6

ANNEXURE A SITE LOCALITY

ANNEXURE B STORMWATER LAYOUT DRAWINGS

ANNEXURE C STORMWATER GABION DETAIL

ANNEXURE D TRAFFIC IMPACT ASSESMENT

1. EXECUTIVE SUMMARY

Kantey & Templer PTY LTD has been appointed by the Cato Ridge Development Company (CRDC) to compile a Pre-Feasibility Engineering Services Report in order to obtain preliminary approval from the service authorities for the proposed bulk service provision for the new Cato Ridge Development. This report documents the Proposed Stormwater Management Plan for the Proposed Development.

The greater Cato Ridge area has been considered for a number of years as a major metropolitan industrial growth node within eThekwini as well as fulfilling the role of “back of port” logistics along the N3 [SIP2] logistics corridor between Gauteng and Durban

The proposed development has been programmed to be implemented in 3 Priority Phases

Due to the future road upgrades required and planned upgrade of the bulk trunk water and sewer lines by the eThekweni Municipality in 2031/2032 this proposed development will be unlocked in an incremental approach as follows:-

PRIORITY PHASE 1

Priority Phase 1 is programmed to be unlocked within the next 18 months and will be phased in over the next 10 year period as and when the demand arises.

PRIORITY PHASE 2

Phase 2 will be implemented over the next 10 to 20 years

PRIORITY PHASE 3

Phase 3 will be implemented over the next 20 to 25 years

2. INTRODUCTION

Kantey & Templer PTY LTD was appointed by the Cato Ridge Development Company (CRDC) to compile a Pre-Feasibility Engineering Services Report in order to obtain preliminary approval from the service authorities for the proposed bulk service provision for the new Cato Ridge Development in KwaZulu-Natal in support of the Environmental Impact Assessment Application update as per the Executive Summary. This report provides details of the Proposed Stormwater Management Plan for the proposed development

2.1 Location & Access

The proposed development is 351 hectares and is situated on a greenfields site.

The site locality plan is attached in Annexure A of this document.

The development will have three (3) Priority Phase. The co-ordinates (centre) of each Priority Phase are as follows:

Priority Phase	Y- CORDINATES	X- CORDINATES
Priority Phase 1	+37 068	+3 289 114
Priority Phase 2	+36 175	+3 286 829
Priority Phase 3	+37 224	+3 290 057

Access to the development is via the R103 and Eddie Hagen Road.

3. DEVELOPMENT PHASING

The Cato Ridge Development is divided into three (3) separate development priorities.

The timeframes above is dependent on a fluctuating economy, market trends and property demands which may change.

The proposed development has been programmed to be implemented in 3 different Priority Phases.

Due to the future road upgrades required and planned upgrade of the bulk trunk water and sewer lines by the eThekweni Municipality in 2031/2032 this proposed development will be unlocked in an incremental approach as follows:-

PRIORITY PHASE 1

Priority Phase 1 is programmed to be unlocked within the next 18 months and will be phased in over the next 10 year period as and when the demand arises which will be carried out as follows:-

a) The lower section of Phase 1 along the R103 and up to the Assmang turnoff along Eddie Hagan to be phased in over the next 5 years.
b) The upper section of Phase 1 from the Assmang Turn-off upto Macro Turn-off to be phased in over the next 5 to 10 years.

PRIORITY PHASE 2

Priority Phase 2 will only be unlocked after the road, sewer, water & electrical infrastructure has been completed in the area.

The eThekweni Municipality is currently programming to upgrade the bulk sewer & water reticulation in 2031/ 2032. It will not be economically viable to develop Phase 2 prior to this bulk water and sewer being carried out by Municipality.

Phase 2 will be implemented over the next 10 to 20 years

PRIORITY PHASE 3

There has been interests from the surrounding land owners to purchase land in close proximity to their existing properties and they will therefore be responsible to install their own services.

The remaining land for development is relatively minor and has been considered within this report.

Phase 3 will be implemented over the next 20 to 25 years

3.4 General

The proposed development is zoned as follows:-

1) Priority Phase 1 & 2 are presently zoned “General Industry 2”
2) Priority Phase 3 is presently zoned Agriculture

The Bulk & Internal services will be designed according to accepted engineering specifications and principles as well as acceptable environmental requirements and specifications, as provided in approved environmental scoping and impact assessment reports. The following engineering services for the development of the area are proposed and are based on the following assumptions:-

a) The level of service will cater for light industry logistics and warehouses, on the proposed development site.
b) Where possible, the services will be designed to connect to the existing and proposed new Municipal, SANRAL & Department of Transport services infrastructure.
c) The provision of services to the proposed development will be designed to ministerial norms and standards and generally in accordance with the “Guidelines for the Provisions of Engineering Services and Amenities in Residential Townships” (Red Book).

4. BULK INFRASTRUCTURE

4.1 Existing Road & Stormwater Infrastructure

Existing Roads

The present road network to the site and within the site is via the R103 and Eddie Hagan Road

Existing Stormwater

The existing R103, Eddie Hagan Drive, District Road 1022 and other minor existing roads do have existing stormwater that discharges into low points and valley lines.

5. PROPOSED BUILDING DEVELOPMENT

5.1 Cato Ridge Phased Development

The table below indicates the three (3) Priority Phases for the proposed development.

Priority	Warehouse Bulk (HA)	Industrial Bulk (HA)
Priority 1	60.305~~912~~	60.305~~912~~
Priority 2	74.015~~541~~	74.015~~541~~
Priority 3	19.31~~20.309~~	19.31~~20.309~~
TOTAL	**153.63~~6.762~~**	**1536.63~~762~~**

Please refer to Paragraph 3. Development Phasing of this report which will provide details of Priority Phase 1, Priority Phase 2 & Priority Phase 3 for the proposed development

6. NEW INFRASTRUCTURE

6.1 Road Network

Roads will be constructed to the Red Book standards

A Traffic Impact Assessment was carried out by David McFarlane and Associates which is attached in Annexure D (Revision 5 dated 13 March 2023) and is summarised as follows:-

Phasing of Road Infrastructure

There is an opportunity to make an initial start of developing the first few sites as the current road network does have spare capacity so the development could start without any initial interventions.

Between the initial start of developing the first sites and full development there is clearly opportunity to phase in the required infrastructure to match the take-up of the development. The potential sequence of events is as listed below for the upgrades to the R103 and Eddie Hagan:-

a) The current road network has spare capacity, so the development could make a start with no initial interventions.
b) The N3 Cato Ridge Interchange will need to be signalised as the capacity is reached.
c) Once the N3 Cato Ridge Interchange reaches capacity then the N3 KwaXimba Interchange will need to be constructed which will occur around 40% of the full development of this project.
d) The identified upgrades to Eddie Hagen Drive could also be phased in to match the progress on the development. The upgrade of Eddie Hagan Drive to 2 + 2 lanes could be as far as Eddie Hagan/ Assmang intersection as the first phase of the development, which can then be extended further north for phase 2 of the project.

Internal Roads

The design criteria will generally be based on the design standards of the Guidelines for the Provision of Engineering Services and Amenities in Residential Township Development.

The following criteria will be used in the geometric design of the roads.

Main Street Roads	:	7.0 m wide
Design Speed	:	Between 40 to 60 km/h
Crossfall	:	2.5%
Min. K Value	:	4
Min V L length	:	20 m
Right of Way Servitude width		15.24m
Cut slopes in-situ soil	:	1:1,5
Cut slopes in bedrock	:	1:0,1 (almost vertical depending on specific bedrock characteristics)
Fill slopes	:	1:1,5 (maximum)

Longitudinal gradient Close to natural ground (maximum 10%)

Road Recommendations

Our recommendation [from a traffic impact view point only] is that the proposed development be allowed to proceed, provided the various mitigation measures identified are timeously

7. STORMWATER MANAGEMENT SYSTEM

Introduction

The proposed stormwater design concept for the proposed development in Cato Ridge must comply to all Environmental and eThekweni Municipality requirements and specifications.

The traditional design of storm water drainage systems collects and confines storm water runoff as rapidly as possible to a suitable location where it can be discharged. This traditional design can however result in drainage and flooding problems downstream unless erosion protection measures are implemented.

The road network stormwater management system is designed to accommodate both the 351 hectare development footprints and the actual roads.

Objective

The objective of a storm water management plan should be to manage the storm water resources of the collective watersheds to:

- Prevent erosion and flood damage
- Preserve the natural and beneficial functions of the natural drainage system
- Preserve and enhance storm water quality.

The storm water management strategy will be to collect all surface runoff, pass it through an attenuation/ detention system before discharging the water into the natural drainage systems.

The storm water drainage network system will be kept separate from the waste water.

Stormwater Design

The stormwater management principles applied to the proposed Cato Ridge development to accommodate the stormwater run-off is separated into two sections which are as follows:-

1**) All developable Erf/ Sites to be responsible for their own stormwater design and attenuation infrastructure.**

A standard condition will be incorporated in all Purchase or Rental Agreements for each erf/stand that the Developer/ Landowner/ Tenant will be responsible to submit a stormwater management plan to the eThekweni Municipality for approval. This shall include:-

a) a stormwater design to attenuate the infrastructure into attenuation ponds or attenuation within the hardstands/ parking area. Other local on-site attenuation may be considered which includes grass-lined drains and swales, storm water infiltration systems undulations, landscaping etc. The attenuation area will be designed for a 1 in 50 year event.
b) A throttling manhole will be designed and sized accordingly at the attenuation outlet to cater for the pre and post stormwater flows.
c) stormwater reticulation pipelines, channels, energy dissipation measures etc.
d) Erosion protection where required.
e) Details of the stormwater discharge tie into point into the bulk Municipal road stormwater system
f) All internal stormwater pipes will be gravity reticulated via the sub-catchments across the site.

2) Roads Stormwater

The bulk stormwater has been designed for a minimum 1 in 50 year event

Storm water from the roads and surface channels will be collected through inlets and piped across or parallel to the roads', within the road reserve, to points where the water will be discharged into attenuation ponds, in an efficient, safe and environmental acceptable manner. Please refer to Drawing no 20207-DSW 01 Revision G for details of the stormwater reticulation system and proposed attenuation ponds.

Each attenuation pond will be designed accordingly and constructed with throttling manholes at the outlets to restrict the outlet flow in the event of a heavy storm. The design will cater for the pre and post stormwater flows from the roads prior to discharging into the valleys and low lying areas.

The attenuation ponds will be dry and will only be a temporary storage in the event of heavy rainfall. The discharge from the attenuation pond will be restricted by the throttling manhole.

The velocity and energy of the stormwater discharge will be reduced when entering the stormwater attenuation ponds due to:-

1) the volume of the pond which must be vegetated.
2) dissipator blocks at the inlet headwall.
3) Gabion baskets/ rip rap at the inlet to prevent erosion.

At discharge points :-

1) Grass lined open drains will be installed which will assist in retaining sediment and reduce the velocity of the flows.

2) Where applicable concrete channels or concrete pipes will be installed from the attenuation pond outlets which will be directed within the existing road network to avoid further impact on the

environment. This will reduce the registration of servitudes through tribal authority areas. Road Servitudes will be registered where required in remaining disturbed areas.

3) The drains and stormwater pipe network will prevent flooding of houses and reduce the safety risk within the area.

4) Where there are no structures or erf/stands the outlet will discharge directly onto the site with erosion protection where deemed necessary.

5) The design measures incorporated will take measures into account to reduce the impact on disturbing the biodiversity in the area. Where possible, stormwater discharge points will be directed to follow areas that have already been disturbed by the existing road footprint.

7) Where possible, the stormwater will discharge into an open area to allow water to dissipate before entering into the river systems.

The standards for the storm water infrastructure to be installed with the proposed road development can be summarised as follows:

➢ Flood occurrence interval	: 50 years
➢ Pipe Material	: Concrete
➢ Pipe class	: Minimum 75D in road reserve and 100D at road crossings. The developer will be responsible for their own stormwater within the sites to be developed
➢ Pipe diameters	: minimum 450ϕmm diameter within the road reserve and discharging form the road reserve. The developer will be responsible for their own stormwater within the sites to be developed
➢ Bedding	: Class C
➢ Inlets	: Manhole
➢ Junctions	: Points of deflections on pipelines
➢ V-drains	: Concrete lined open channels
➢ Cut-off drains	: Grass lined channels and berms

Erosion Protection

The following recommendations are suggested:

- It is essential that appropriate erosion control measures need to be taken into consideration at the various storm water discharge points located throughout the site to limit erosion on the receiving environment e.g. at headwalls and culverts.
- Steep water courses may require additional protection from erosion through the use of lined channels, controlled drops etc. in order to dissipate flow energy.
- Road intersections should be designed to prevent localised flooding
- The storm water system must be kept separate from the wastewater (sewer) drainage system
- Suitable erosion protection measures will be installed at all discharge points. At each attenuation pond dissipator blocks with a gabion retaining structure (see attached detail in Annexure C will be constructed after each throttling manhole/headwall outlet to reduce the stormwater velocity at the outlet which will reduce erosion.

On completion of the construction work, the site will be contoured to ensure free flow of runoff and to prevent ponding of water. Drainage will be controlled to ensure that runoff from the site will not culminate in off - site pollution or result in damage to properties downstream of any storm water discharge.

During final design stages erosion protection will be designed to comply to Municipal standards. Special precautions will be carried out to ensure that a designed storm water discharge route is approved to prevent erosion or flooding in the valleys and low lying areas which also have residential houses in areas.

The attenuation ponds are a temporary storage facility and will only fill up in the event of heavy rainfall event.

KANTEY AND TEMPLER CONSULTING ENGINEERS

KEVIN HOLHS
Pr. Eng. 20060264
EXECUTIVE ASSOCIATE

ANNEXURE A

Site Locality Plan

LOCALITY SKETCH
(N.T.S.)

ANNEXURE B

Stormwater Layout drawing

LOCALITY SKETCH
N.T.S

PONDS:		
POND NUMBER	ROAD LENGTH (m)	VOLUME (m^3)
1	1127	130
2	877	101
3	1508	174
4	509	59
5	2233	257
6	1708	197
7	1067	123
8	1260	145
9	3456	398
10	1720	198
11	1712	197
12	896	71

LEGEND:

STORMWATER LINE:

STORMWATER PIPE LENGTHS (m)	450mm Ø	600mm Ø	750mm Ø	900mm Ø	TOTAL LENGTH (m)
PHASE 1					
STORMWATER LINE 1	566	394			960
STORMWATER LINE 2	170				170
STORMWATER LINE 3		220			220
STORMWATER LINE 4	576	384			960
STORMWATER LINE 5	572	203			775
STORMWATER LINE 6				130	130
STORMWATER LINE 7				120	120
STORMWATER LINE 8	570	290			860
STORMWATER LINE 9	650				650
STORMWATER LINE 10	210				210
STORMWATER LINE 11		140			140
STORMWATER LINE 11a			160		160
STORMWATER LINE 12				570	570
STORMWATER LINE 13	640	270			910
STORMWATER LINE 14			310		310
TOTAL	**3954**	**1901**	**470**	**820**	**7145**
PHASE 2					
STORMWATER LINE 15	570	50			620
STORMWATER LINE 16	175				175
STORMWATER LINE 17	125				125
STORMWATER LINE 18	100				100
STORMWATER LINE 19		330			330
STORMWATER LINE 20				130	130
STORMWATER LINE 21	540				540
STORMWATER LINE 22	210				210
STORMWATER LINE 23		80			80
STORMWATER LINE 24		230			230
STORMWATER LINE 25	380				380
STORMWATER LINE 26	605	475			1080
STORMWATER LINE 26a			110		110
STORMWATER LINE 26b	135				135
STORMWATER LINE 27	305				305
STORMWATER LINE 28	160				160
STORMWATER LINE 29	430				430
STORMWATER LINE 30		235			235
STORMWATER LINE 31	200				200
STORMWATER LINE 32	375				375
STORMWATER LINE 33	470				470
STORMWATER LINE 34		300			300
STORMWATER LINE 35	570	140			710
STORMWATER LINE 35a			90		90
STORMWATER LINE 36	565	245			810
STORMWATER LINE 37	470				470
STORMWATER LINE 38			490	490	980
STORMWATER LINE 39	570	150			720
STORMWATER LINE 39a	215				215
STORMWATER LINE 39b	100				100
STORMWATER LINE 40	570	260			830
STORMWATER LINE 41	570	200			770
STORMWATER LINE 41a			460		460
TOTAL	**8410**	**2695**	**1150**	**620**	**12875**
PHASE 3					
STORMWATER LINE 42	400				400
STORMWATER LINE 43	260				260
STORMWATER LINE 44a		780			780
TOTAL	**660**	**780**			**25710**
GRAND TOAL	**13024**	**5376**	**1620**	**1440**	

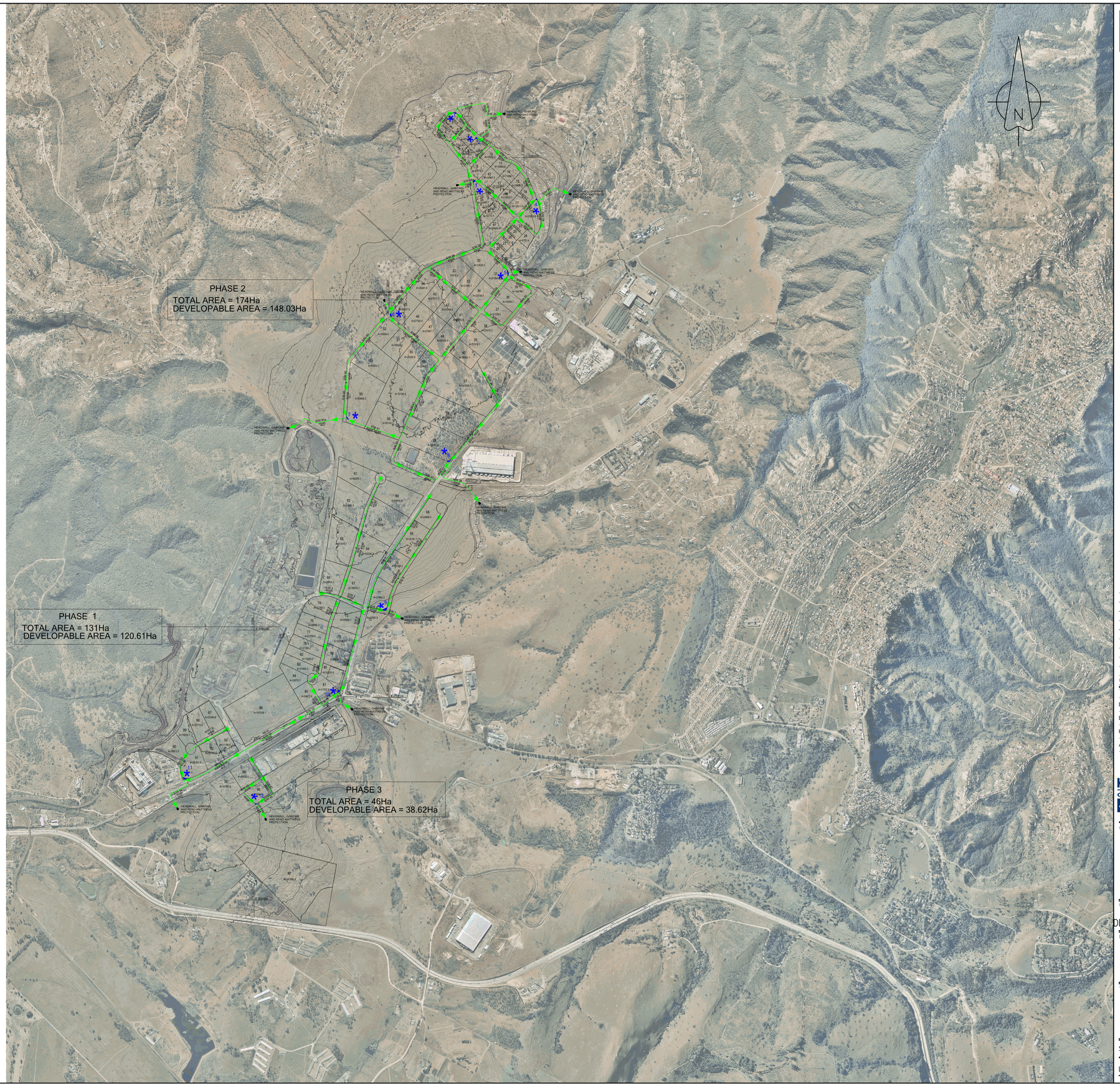

© COPYRIGHT
THIS DRAWING AND DESIGN IS CONFIDENTIAL AND THE PROPERTY OF KANTEY & TEMPLER AND MAY NOT BE DISCLOSED TO A THIRD PARTY, COPIED/REPRODUCED IN WHOLE OR IN PART, WITHOUT THE WRITTEN PERMISSION OF KANTEY & TEMPLER.

REFERENCE DRAWING

REV	DESCRIPTION	DR.	APP.	DATE
G	S/WATER LAYOUT AMENDED AND PIPE SIZES ADDED	SKM	KH	04/04/23
F	S/WATER LAYOUT AMENDED	SKM	KH	03/02/23
E	S/WATER LAYOUT AMENDED	SKM	KH	23/01/23
D	S/WATER LAYOUT AMENDED	SKM	KH	25/10/22
C	S/WATER LAYOUT AMENDED TO SUIT LAYOUT CHANGES-FOR DISCUSSION	SKM	KH	06/10/22
B	ISSUED FOR DISCUSSION	ZC	RK	22/08/22
A	ISSUED FOR DISCUSSION	ZC	KH	02/08/22

	INITIALS	SIGN	DATE
DESIGNED	RK		
DRAWN	ZC		
PROJECT ENG.	KH		
APPROVED			

KANTEY & TEMPLER
CONSULTING ENGINEERS
Engineering African Development
PO BOX 290 HILTON SOUTH AFRICA 3245 TEL +27 33 347 5453

CLIENT LOGO

CATO RIDGE ASSMANG MANGANESE

CLIENT
CATO RIDGE DEVELOPMENT COMPANY(Pty) Ltd

PROJECT
CATO RIDGE
PHASED DEVELOPMENT

TITLE
PROPOSED
STORMWATER LAYOUT

SCALE : 1:10000

DRAWING No. 20207–DSW 01 REV G

KT-pmb-A0.dwg (SCALE) A0 SHEET

ANNEXURE C

Stormwater Gabion Detail

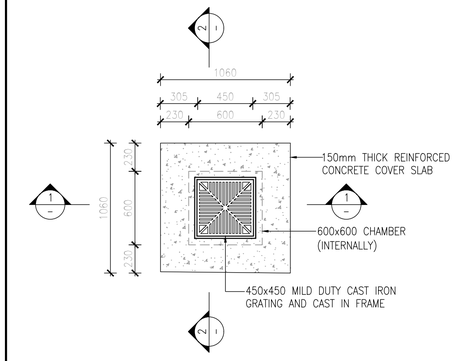

PLAN : GRID INLET TYPE 1
SCALE 1:25

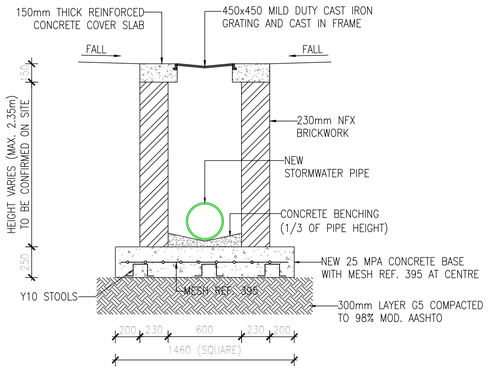

SECTION 1–1
TYPICAL SECTION THROUGH GRID INLET TYPE 1
SCALE 1:25

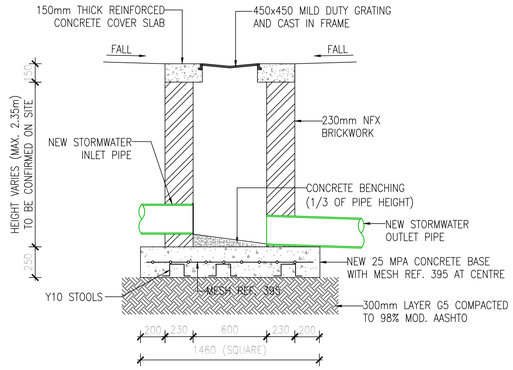

SECTION 2–2
TYPICAL SECTION THROUGH GRID INLET TYPE 1
SCALE 1:25

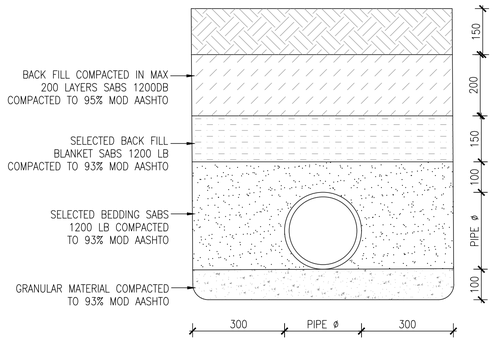

CLASS B BEDDING
TYPICAL PIPE TRENCH DETAIL
FOR UPVC PIPES 1: 10

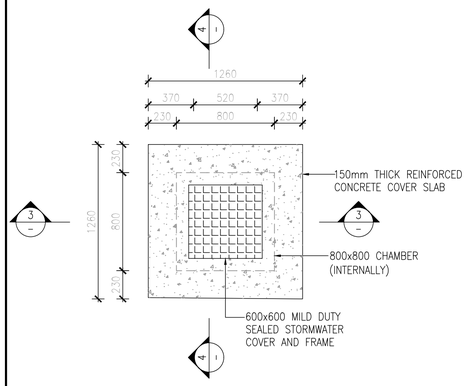

PLAN : MANHOLE TYPE 1
SCALE 1:25

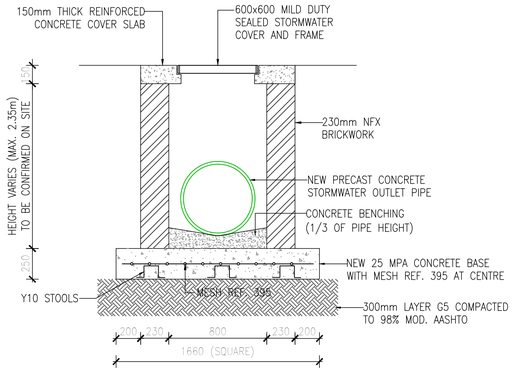

SECTION 3–3
TYPICAL SECTION THROUGH MANHOLE TYPE 1
SCALE 1:25

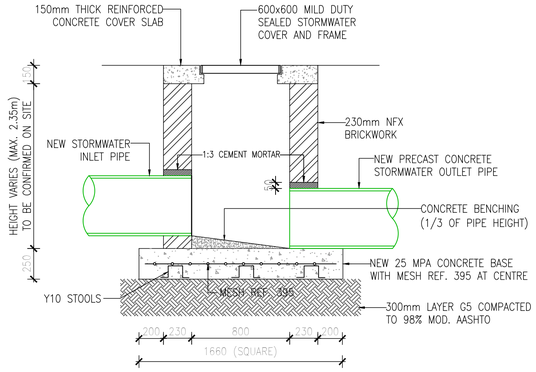

SECTION 4–4
TYPICAL SECTION THROUGH MANHOLE TYPE 1
SCALE 1:25

Trench width		
Nominal Pipe Diameter (D) (mm)	Recommended Dimension (A) (mm)	Maximum Trench Width (mm)
300	900	900
375	1000	1000
450	1100	1100
600	1300	1300
750	1500	1500
900	1600	1700

TABLE 2

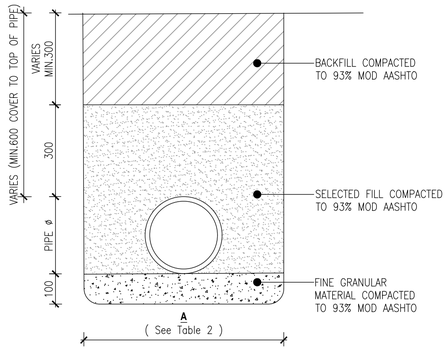

CLASS C BEDDING
TYPICAL PIPE TRENCH DETAIL
FOR CONCRETE PIPES 1: 10

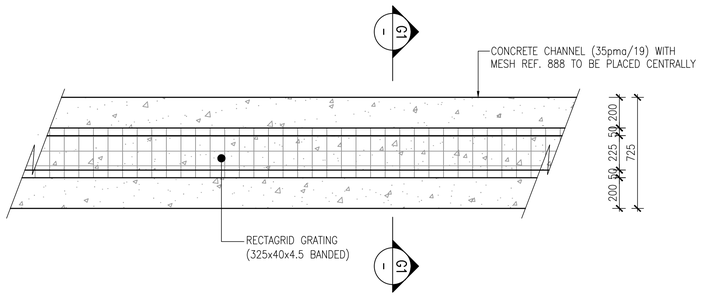

TYPICAL PLAN: GRID CHANNEL 1, 2 AND 3 (1:20)

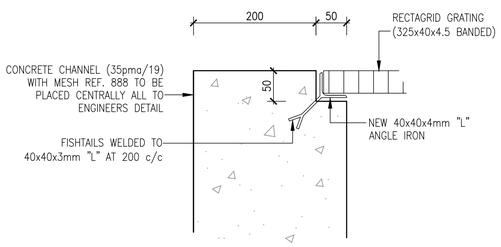

DETAIL B
SCALE 1:5

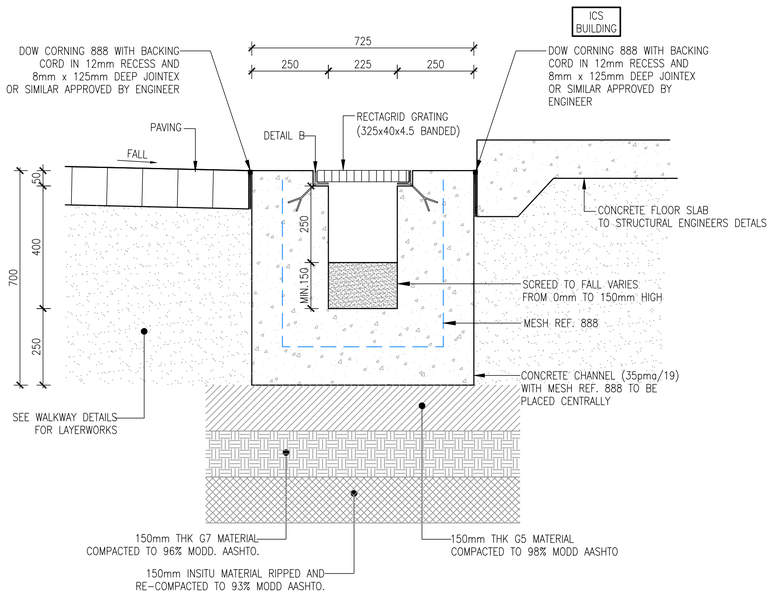

SECTION G1–G1
TYPICAL SECTION THROUGH GRID CHANNEL 1, 2 AND 3
SCALE 1:10

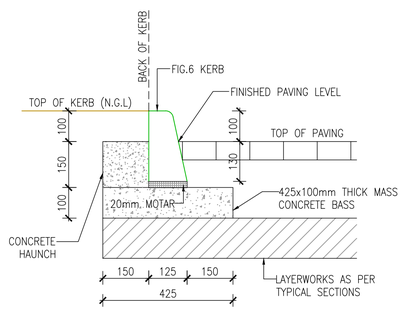

TYPICAL FIG.6 KERB DETAIL
SCALE 1:10

© COPYRIGHT
THIS DRAWING AND DESIGN IS CONFIDENTIAL AND THE PROPERTY OF KANTEY & TEMPLER AND MAY NOT BE DISCLOSED TO A THIRD PARTY, COPIED/REPRODUCED IN WHOLE OR IN PART, WITHOUT THE WRITTEN PERMISSION OF KANTEY & TEMPLER.

REFERENCE DRAWING

REV	DESCRIPTION	DR.	APP.	DATE
A	FOR INFORMATION ONLY	SKM	RK	23/01/23

	INITIALS	SIGN	DATE
DESIGNED	RK		
DRAWN	SKM		
PROJECT ENG.	KH		
APPROVED			

K&T
KANTEY & TEMPLER
CONSULTING ENGINEERS
Engineering African Development
PO BOX 290 HILTON SOUTH AFRICA 3245 TEL +27 33 347 5453

CLIENT LOGO
CATO RIDGE
ASSMANG
MANGANESE

CLIENT
CATO RIDGE DEVELOPMENT COMPANY(Pty) Ltd

PROJECT
CATO RIDGE
PHASED DEVELOPMENT

TITLE
STORMWATER:
STANDARD DETAILS

SCALE : AS SHOWN

DRAWING No. 20207–CSW 01 REV A

KT–pmb–A1.dwg (SCALE) A1 SHEET

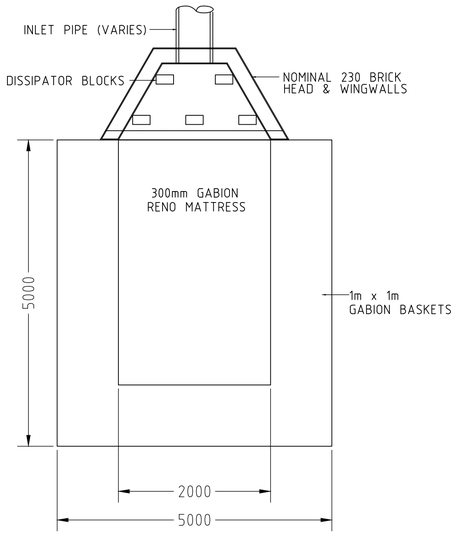

PLAN

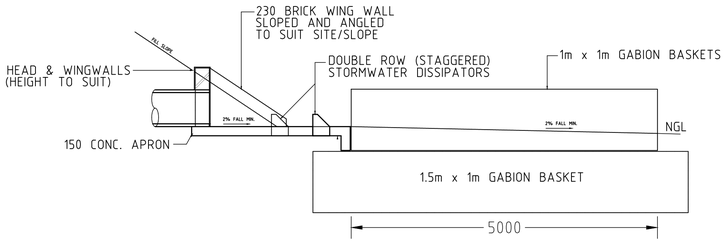

SECTION

HEADWALL WITH GABION BASKETS DETAIL

© COPYRIGHT
THIS DRAWING AND DESIGN IS CONFIDENTIAL AND THE PROPERTY OF KANTEY & TEMPLER AND MAY NOT BE DISCLOSED TO A THIRD PARTY, COPIED/REPRODUCED IN WHOLE OR IN PART, WITHOUT THE WRITTEN PERMISSION OF KANTEY & TEMPLER.

REFERENCE DRAWING

BUILDING PLAN NO.:

REV	DESCRIPTION	DR.	APP.	DATE
A	FOR INFORMATION ONLY	SKM	RK	23/01/23

	INITIALS	SIGN	DATE
DESIGNED	RK		
DRAWN	SKM		
PROJECT ENG.	KH		
APPROVED			

K&T
KANTEY & TEMPLER
CONSULTING ENGINEERS
Engineering African Development
PO BOX 290 HILTON SOUTH AFRICA 3245 TEL +27 33 347 5453

CLIENT LOGO

CATO RIDGE ASSMANG MANGANESE

CLIENT

CATO RIDGE DEVELOPMENT COMPANY(Pty) Ltd

PROJECT

CATO RIDGE PHASED DEVELOPMENT

TITLE

GABION BASKETS, RENO MATTRESS AND HEADWALL DETAILS

SCALE : AS SHOWN

DRAWING No. 20207-CSW 02 REV A

KT-pmb-A1.dwg (SCALE) A1 SHEET

ANNEXURE D

Traffic Impact Assessment